SAMSUNG

COLOR DUAL QUAD OBSERVATION SYSTEM

SMO-150QP

User Guide
Manuel d'utilisation
Bedienungsanleitung
Guía del usuario
Guida dell'utente
Руководство пользователя
Gebruikershandleiding
راهنماي استفاده كننده
دليل المستخدم

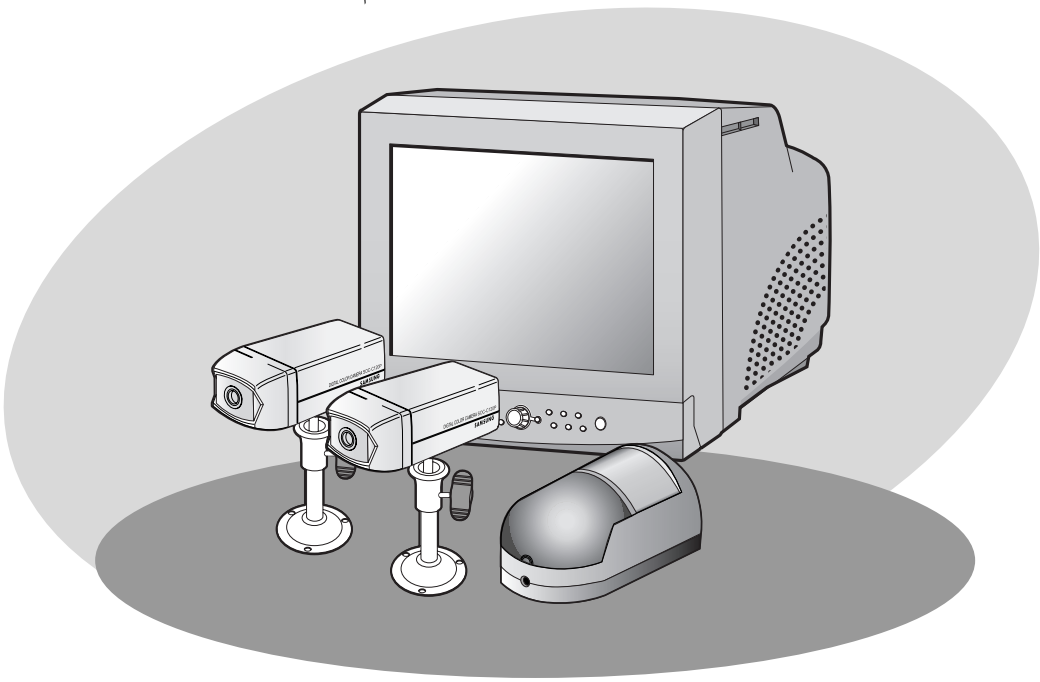

IMPORTANT SAFETY INSTRUCTIONS

1. Read these instructions.
2. Keep these Instructions.
3. Heed all warnings.
4. Follow all instructions.
5. Do not use this apparatus near water.
6. Clean only with dry cloth.
7. Do not block any ventilation openings. Install in accordance with the manufacturer's instructions.
8. Do not install near any heat sources such as radiators, heat registers, stoves, or other apparatus (including amplifiers) that produce heat.
9. Do not defeat the safety purpose of the polarized or grounding-type plug. A polarized plug has two blades with one wider than the other. A grounding type plug has two blades and a third grounding prong. The wide blade or the third prong are provided for your safety. If the provided plug does not fit into your outlet, consult an electrician for replacement of the obsolete outlet.
10. Protect the power cord from being walked on or pinched particularly at plugs, convenience receptacles, and the point where they exit from the apparatus.
11. Only use attachment/accessories specified by the manufacturer.
12. Use only with the cart, stand, tripod, bracket, or table specified by the manufacturer, or sold with the apparatus. When a cart is used, use caution when moving the cart/apparatus combination to avoid injury from tip-over.


S 3126 A

13. Unplug this apparatus during lightning storms or when unused for long periods of time.
14. Refer all servicing to qualified service personnel. Servicing is required when the apparatus has been damaged in any way, such as power-supply cord or plug is damaged, liquid has been spilled or objects have fallen into the apparatus, the apparatus has been exposed to rain or moisture, does not operate normally, or has been dropped.

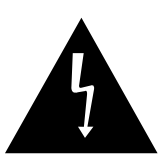

CAUTION

RISK OF ELECTRIC SHOCK
DO NOT OPEN



CAUTION : TO REDUCE THE RISK OF ELECTRIC SHOCK, DO NOT REMOVE COVER (OR BACK). NO USER SERVICEABLE PARTS INSIDE. REFER SERVICING TO QUALIFIED SERVICE PERSONNEL.

Graphic Symbol Explanation

The lightning flash with arrowhead symbol, within an equilateral triangle, is intended to alert the user to the presence of uninsulated 'dangerous voltage' within the product's enclosure that may be of sufficient magnitude to constitute a risk of electric shock to persons.

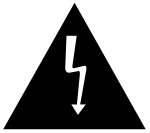

The exclamation point within an equilateral triangle is intended to alert the user to the presence of important operating and maintenance (servicing) instructions in the literature accompanying the appliance.



Warning - To Prevent Fire or Shock Hazard, Do Not Expose This Monitor To Rain or Moisture.

IMPORTANT SAFEGUARDS

Caution

Power source is indicated on the rear of the set. It contains high-voltage parts. If you remove the cover, it may cause fire or electric shock. Do not remove the cover by yourself. (Control switches are at the front of the monitor.)

1. **Read Instructions :** All the safety and operating instructions should be read before the appliance is operated.
2. **Retain Instructions :** The safety and operating instructions should be retained for future reference.
3. **Heed Warnings :** All warnings on the monitor and in the operating instructions should be adhered to.
4. **Follow Instructions :** All operating and user instructions should be followed.
5. **Cleaning :** Unplug this monitor from the wall outlet before cleaning. Do not use liquid cleaners or aerosol cleaners. Use a damp cloth for cleaning.
   Exception. A monitor that is meant for uninterrupted service and that for some specific reason, such as the possibility of the loss of an authorization code for a CATV converter is not intended to be unplugged by the user for cleaning or any other purpose may exclude the reference to unplugging the monitor in the cleaning description otherwise required in Item 5.
6. **Attachments :** Do not use attachments not recommended by Samsung as they may cause hazards.
7. **Water and Moisture :** Do not use this monitor near water for example, near a bathtub, wash bowl, kitchen sink or laundry tub in a wet basement or near a swimming pool and the like wet basement or near a swimming pool and the like.

8. **Accessories :** Do not place this monitor on an unstable cart, stand, tripod, bracket or table. The monitor may fall, causing serious injury to a child or adult and serious damage to the appliance. Use only with a cart, stand, tripod. bracket or table recommended by Samsung or sold with the monitor. Any mounting of the monitor should follow Samsung's instructions and should use a mounting accessory recommended by Samsung.

9. **Ventilation :** Slots and openings in the cabinet are provided for ventilation and to ensure reliable operation of the monitor and to protect it from overheating and these openings should never be blocked by placing the monitor on a bed, sofa, rug or other similar surface. This monitor should never be placed near or over a radiator or heat register. This monitor should not be placed in a built-in installation such as a bookcase or rack unless proper ventilation is provided or Samsung's instructions have been adhered to.

10. **Power Sources :** This monitor should be operated only from the type of power source indicated on the making label. If you are not sure of the type of power supply to your installation site, consult your Samsung dealer or local power company.

11. **Grounding or Polarization :** For monitors equipped with a 3-wire grounding-type plug having a third(grounding) pin. This plug will only fit into a grounding type power outlet. This is a safety feature. If you are unable to insert the plug into the outlet, contact your electrician to replace your obsolete outlet. Do not defeat the safety purpose of the grounding-type plug.

12. **Power :** Cord Protection-Power supply cords should be routed so that they are not likely to be walked on or pinched by items placed upon or against them, paying particular attention to cords at plugs, convenience receptacles and the point where they exit from the monitor.

13. **Lightning :** For added protection for this monitor during a lightning storm, or when it is left unattended and unused for long periods of time, unplug it from the wall outlet and disconnect the cable system. This will prevent damage to the monitor due to lightning and power-line surges.

14. **Overloading :** Do not overload wall outlets and extension cords as this can result in a risk of fire of electric shock.

15. **Object and liquid Entry :** Never push objects of any kind into this monitor through openings as they may touch dangerous voltage points or short-out parts that could result in a fire or electric shock.
    Never spill liquid of any kind on the monitor.

16. **Servicing :** Do not attempt to service this monitor yourself as opening or removing cover may expose you to dangerous voltage or other hazards. Refer all servicing to qualified service personnel.

17. **Damage Requiring Service :** Unplug this monitor from the wall outlet and refer servicing to qualified service personnel under the following conditions.

    a. When the power-supply cord or plug is damaged.

    b. If liquid has been spilled, or objects have fallen into the monitor.

    c. If the monitor has been exposed to rain or water.

    d. If the monitor does not operate normally by following the operating instructions. Adjust only those controls that are covered by the operating instructions as an improper adjustment of other controls may result in damage and require extensive work by a qualified technician to restore the monitor to its normal operation.

    e. If the monitor has been dropped or the cabinet has been damaged.

    f. When the monitor exhibits a distinct change in performance-this indicates a need for service.

18. **Replacement Parts :** When replacement parts are required, be sure the service technician has used replacement parts specified by Samsung or have the same characteristics as the original parts.
Unauthorized substitutions may result in fire, electric shock or other hazards.

19. **Safety Check :** Upon completion of any service or repairs to this monitor, ask the service technician to preform safety checks to determine that the monitor is in proper operating condition.

FCC & ICES Information

Warning

This equipment has been tested and found to comply the limits for a class A digital device, pursuant to part 15 of the FCC Rules and ICES-003 of Industry Canada.
These limits are designed to provide reasonable protection against harmful interference when the equipment is operated in a commercial environment. This equipment generate, uses, and can radiate radio frequency energy and, if not installed and used in accordance with the instruction manual, may cause harmful interference to radio communications.
Operation of this equipment in a residential area is likely to cause harmful interference in which case the user will be required to correct the interference at his own expense.

User-Installer Caution

Your authority to operate this FCC verified equipment could be voided if you make changes or modifications not expressly approved by the party responsible for compliance to part 15 of the FCC Rules.

Information to user

Changes or modifications not expressly approved by the party responsible for compliance could void the user's authority to operate the equipment.

NOTE: This equipment has been tested and found to comply with the limits for a Class A digital device, pursuant to Part 15 of the FCC Rules.
These limits are designed to provide reasonable protection against harmful interference when the equipment is operated in a commercial environment. This equipment generates, uses, and can radiate radio frequency energy and, if not installed and used in accordance with the instruction manual, may cause harmful interference to radio communications.
Operation of this equipment in a residential area is likely to cause harmful interference in which case the user will be required to correct the interference at his own expense.

This device complies with Part 15 of the FCC Rules.
Operation is subject to the following two conditions: (1) this device may not cause harmful interference, and (2) this device must accept any interference received, including interference that may cause undesired operation.

Changes or modifications not expressly approved by the party responsible for compliance could void the user's authority to operate the equipment.
If necessary, consult your dealer or an experienced radio/television technician for additional suggestions.
You may find the booklet called How to Identify and Resolve Radio/TV Interference Problems helpful.
This booklet was prepared by the Federal Communications Commission.
It is available from the U.S. Government Printing Office, Washington, DC 20402, Stock Number 004-000-00345-4.

The party responsible for product compliance:
SAMSUNG ELECTRONICS CO., LTD.
America QA Lab of Samsung
3351 Michelson Drive,
Suite #290, Irvine, CA92612 USA

IC Compliance Notice

This Class (A) digital apparatus meets all requirements of the Canadian Interference-Causing Equipment Regulations.
Cet appareil numérique de la classe (A) respecte toutes les exigences du Règlement sur le matériel brouilleur du Canada.

This Class A digital apparatus complies with Canadian ICES-003.
Cet appareil numéique de la classe A est conforme à la norme NMB-003 du Canada.

Warning

This is a class A product. In a domestic environment this product may cause radio interference in which case the user may be required to take adequate measures.

Contents

IMPORTANT SAFETY INSTRUCTIONS 2
IMPORTANT SAFEGUARDS 4
FCC & ICES Information 7

Chapter 1: System Components and Installation

1-1) Environmental requirements for installation and safety 12
1-2) System Components 13
1-3) CAMERA composition and installation method 14
1-4) CAMERA composition and connecting method to MONITOR 30
1-5) External terminal connecting method for CAMERA and MONITOR 31
1-6) Whole System connection and configuration 32

Chapter 2: MONITOR FRONT PANEL KEY Function and Using Method

2-1) TALK KEY 33
2-2) AUD/SP SEL KEY 33
2-3) VOL+/VOL- KEY 33
2-4) POWER SAVE- KEY 34
2-5) ALARM RESET- KEY 34
2-6) QUAD/PAGE- KEY 34
2-7) LIVE/VCR- KEY 34
2-8) PIP- KEY 35
2-9) FREEZE- KEY 35
2-10) SEQUENCE- KEY 35
2-11) ZOOM- KEY 35
2-12) POWER- KEY 35
2-13) ENTER- KEY 36
2-14) MENU- KEY 36

Chapter 3: Setting each item function at SETUP MENU

3-1) ADJUST MENU function and setting method 37
3-2) DATE/TIME MENU Function setting 38
3-3) DWELL TIME MENU function setting 38
3-4) DISPLAY MENU function setting 39
3-5) TITLE MENU Function setting 40
3-6) ALARM MENU Function setting 41
3-7) VIEW EVENT LOG MENU function and
setting method 42

Chapter 4: DISPLAY MODE setting method

4-1) SINGLE SCREEN DISPLAY 43
4-2) QUAD MODE DISPLAY 44
4-3) AUTO SEQUENTIAL DISPLAY MODE 45
4-4) PIP MODE DISPLAY 46
4-5) ZOOM MODE DISPLAY 47

Chapter 5: Each product feature

SOC-C120P : Standard Camera 48
SOC-C321P : PIR Camera 49
OBSERVAION MONITOR 50

Chapter 1: System Components and Installation

1-1) Environmental requirements for installation and safety

This section describes the environmental requirements for safe installation and use.
Install the product on a flat table or in a rack. It should be used only when level and should not be used when stood vertically or obliquely. The location in which the main system is installed and the configuration of the wiring room are very important for proper operation of the system.
When the products are installed too closely together or the location is poorly ventilated, the system may not operate properly and maintenance of the system may be difficult. Sufficiently circulate the air within the system operating room and tightly fasten the cover of the main system to prevent malfunction and reduce system downs due to environmental causes.
There are high voltage parts inside. Do not arbitrarily open the cover.

Install the product in a place that meets the following environmental conditions. Be sure to maintain the system under the temperatures and humidity conditions given below:

- Operating temperature : 0°C ~ 40°C
- Storage temperature : -20°C ~ 60°C
- Operating humidity : 20% ~ 85% RH
- Storage humidity : 20% ~ 95 RH
- Input voltage : AC 100V ~ 250V
- Power usage : less than 110 Watts
- Frequency : 50Hz

Caution

When operating the product, the fluctuation of input voltage must be within 10% of the rated voltage and the external power outlet must be grounded, otherwise, it may cause electric shock or malfunction of the product. Do not connect heat-generating appliances such as a hair dryer, iron or refrigerator to the same power outlet in which the product is plugged, otherwise it may cause a fire or malfunction of the product. The use of an Automatic Voltage Regulator (AVR) is highly recommended to ensure that stable power is supplied. Be sure to coil CORE-FERRITE on the connector to reduce electro-magnetic interference (EMI).

1-2) System Components

The system consists of the following :

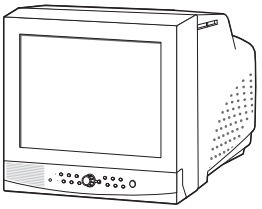

MONITOR

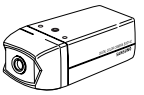

STANDARD CAMERA

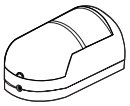

PIR CAMERA

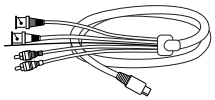

VCR CABLE

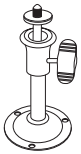

CAMERA BRACKET

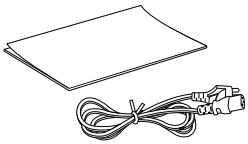

POWER CODE & INSTALLATION MANUAL

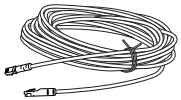

CAMERA CABLE



SENSOR CONNECTOR

ITEM	MODEL	DESCRIPTION	Q'ty	NOTE
MONITOR	SMO-150QP	15" FLAT CRT MONITOR	1	
STANDARD CAMERA	SOC-C120P	NORMAL TYPE CAMERA	2	
PIR CAMERA	SOC-C321P	PIR OBSERVATION CAMERA	1	Tapping Screw 2
CAMERA BRACKET	SBR-110	STAND TYPE BRACKET	2	Tapping Screw 3
CAMERA CABLE	MCB-60	6PIN SHIELD CABLE	2	60ft(1ft=0.3048m)
	MCB-100	6PIN SHIELD CABLE	1	100ft(1ft=0.3048m)
INSTALLATION MANUAL	-	-	1	
POWER CORD	-	-	1	
VCR CABLE	-	-	1	
SENSOR CONNECTOR	-	-	2	

• Check whether all the following devices and accessories are included with the main system.

1-3) CAMERA composition and installation method

1) Standard Camera composition (SOC-C120P)

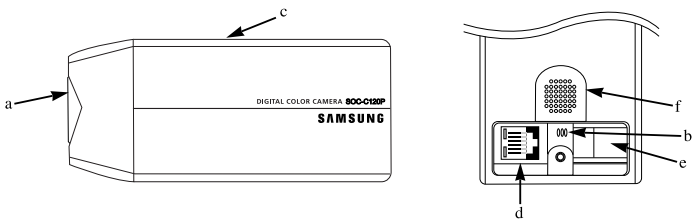

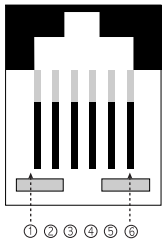

PIN NUMBER	SPEC
①	SPEAKER(HOT)
②	VIDEO_OUT
③	GND
④	SPEAKER(COLD)
⑤	AUDIO_OUT/ALARM_OUT
⑥	12V DC

a. Lens

It has a focal length of 3.8mm and makes it possible for you to observe a relatively wide area.

b. Microphone

Capable of picking up all sound in the vicinity of the camera location and transmitting to the monitor.

c. Camera fitting groove

Enables the camera to be fixed onto the bracket. You may install it either above or below the camera if necessary.

d. 6-pin modular jack

Used to connect the camera to the monitor.

e. SENSOR jack

Used to connect the sensor to the camera.

f. Speaker

It outputs the sound signal which was transfered from the monitor.

- PIN configuration of the DOME CAMERA is the same as the STANDARD CAMERA.
- But, DOME CAMERA does not provide ALARM JACK.

2) Installing Syandard Camera (SOC-C120P)

SOC-C120P s camera can be attached to the wall, ceiling or shelf using the camera mount bracket (SBR-110).

Choose an installation site that can sufficiently support the weight of the equipments to be installed. Attach the camera mount bracket to the wall or ceiling using the supplied three screws (M4 X L15). Adjust the camera to target the video location and tighten the bracket handle on the camera mount bracket.

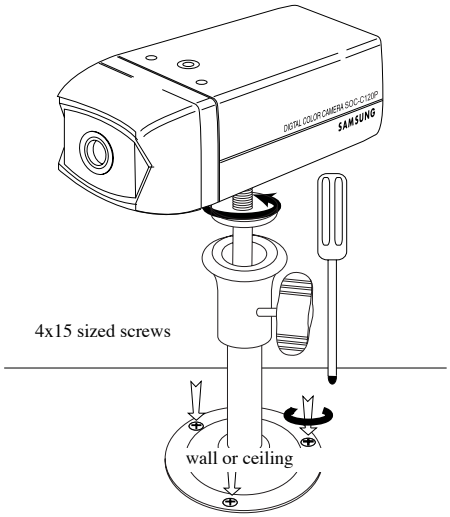

3) PIR Camera composition

(Top) **(Bottom)**

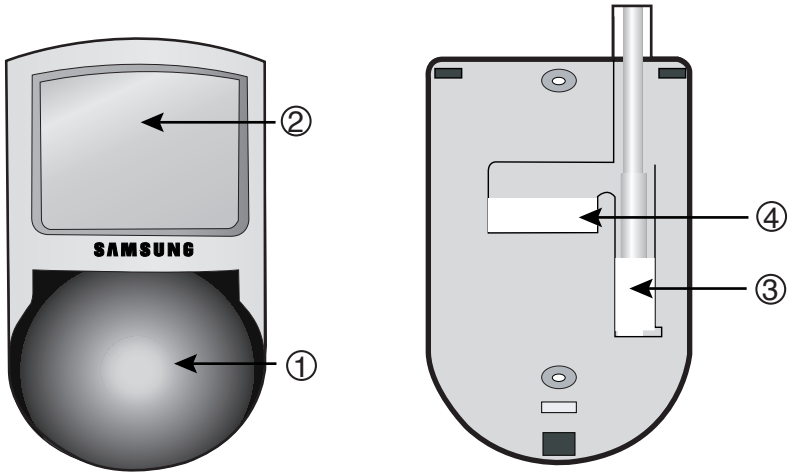

① **Lens**

It has a focal length of 3.8mm and makes it possible for you to observe a relatively wide area.

② **Fresnel Lens**

An infrared focusing lens for increasing the sensitivity of the built-in PIR sensor.

③ **6-pin modular jack**

Used to connect the camera to the monitor.

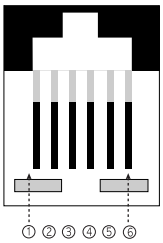

PIN NUMBER	SPEC
①	-
②	VIDEO_OUT
③	GND
④	-
⑤	AUDIO_OUT/ALARM_OUT
⑥	12V DC

④ **5-Pin Terminal Block**

A terminal block for supplying backup power for the PIR sensor operation during power outages and for transmitting the relay signals to external devices during the PIR sensor operation.

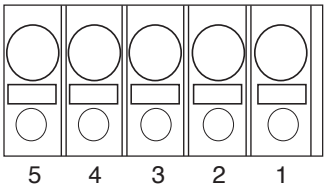

PIN	SPEC	
①	Power Input	DC 12 Volts
②	(Back Up)	Ground
③		Not Used
④	Relay Output	COM
⑤	(350V 130mA)	N.C

(Sensor Detection Angle & Area)

1) Vertical Detection Line

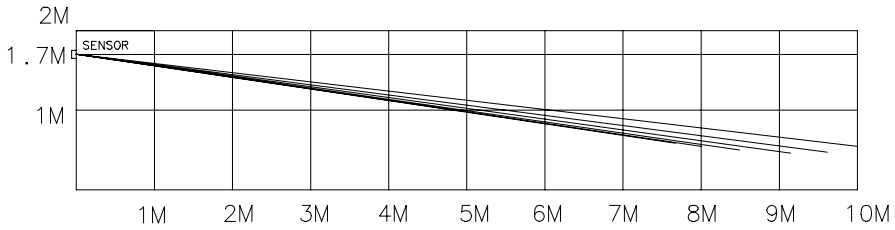

• Please consider the horizontal detection area and the vertical detection line when choosing an installation site.

2) Horizontal Detection Area

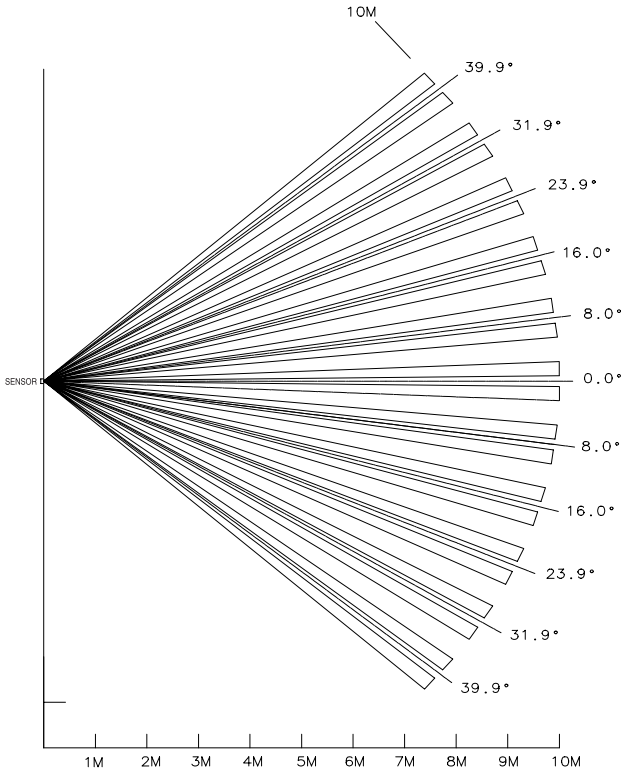

(Inside)

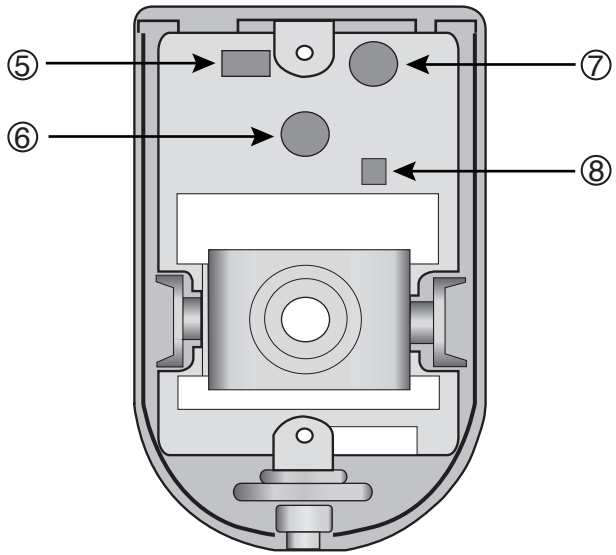

⑤ **Function Switch**

A function switch for the PIR sensor operation.

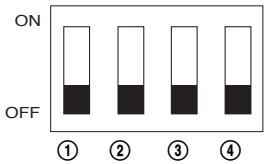

PIN	Function
①	Sensor Sensitivity On, On : Low
②	On, Off : Normal Off, On : Normal Off, Off : High
③	Alarm Led On/Off (Sensor On)
④	Sensor On/Off

⑥ **PIR Sensor**

A thermal heat sensor that detects infrared radiation projected by warm objects.

⑦ **Microphone**

Capable of picking up all sound in the vicinity of the camera location and transmitting to the monitor.

⑧ **Electronic Relay**

Output power is 350V/130mA.

Camera installation Hints

1. Do not install directly towards rising or setting sun. Can cause burn or damage to internal options.
2. Do not limit desired detection zone by interference of curtains, screens, potted plants, etc.
3. Also, do not locate it in front of source of water/oil vapors. Avoid placement of heat source inside detection zone.
4. Do not install outdoors.

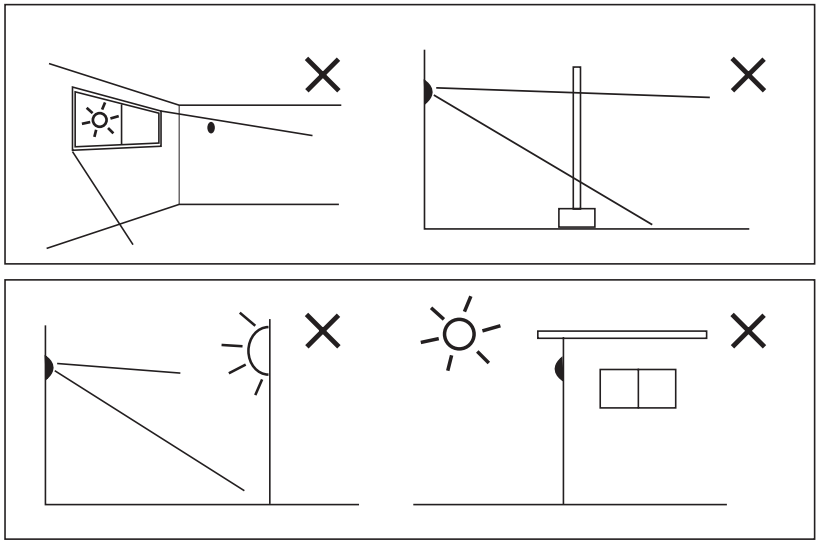

4) Installing the PIR Camera (SOC-C321P)

1. Choose an installation site that can sufficiently support 5 times the weight of the equipments to be installed.
2. Remove the screw (BH M2.6) at the bottom of the main unit by turning it counterclockwise, and then lift the assy-case front as you push it upward to detach it from the case-rear.
   (※ Do not apply excessive force, as doing so may damage the inside assembly.※)

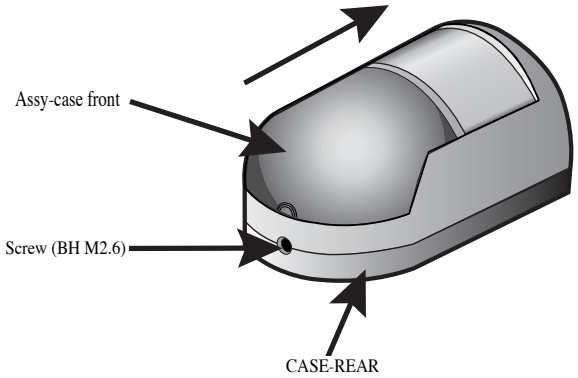

3. Place the case-rear over the installation site and mark screw holes with a pencil (indicated by the circles in the illustration). Drill a pilot hole for each pencil mark (5mm in diameter and at least 35mm in depth), and then fully insert the supplied plastic anchors (HUD 5) into them.

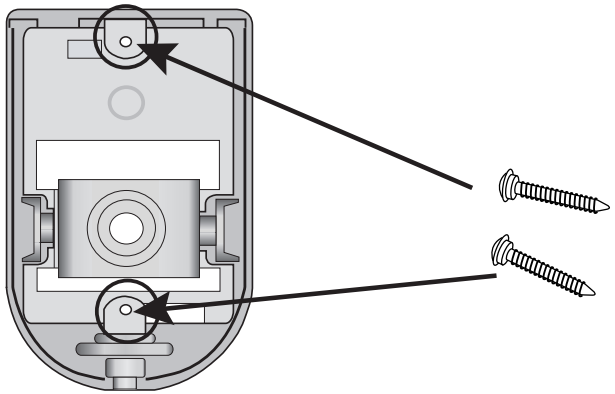

4. Connect the Camera connector (RJ-11) cable to the case-rear as well as the cable to be connected to the terminal.

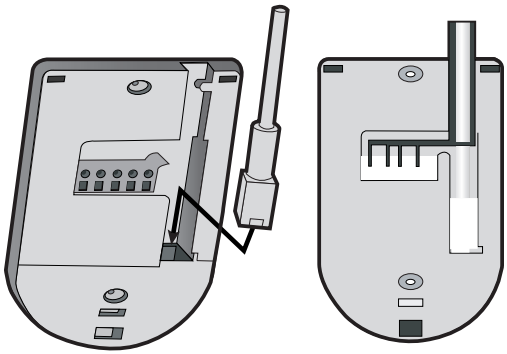

5. Align the two holes of the case-rear to the holes of the plastic anchors, and then fasten the screw-tappings (BH M3 X 30).

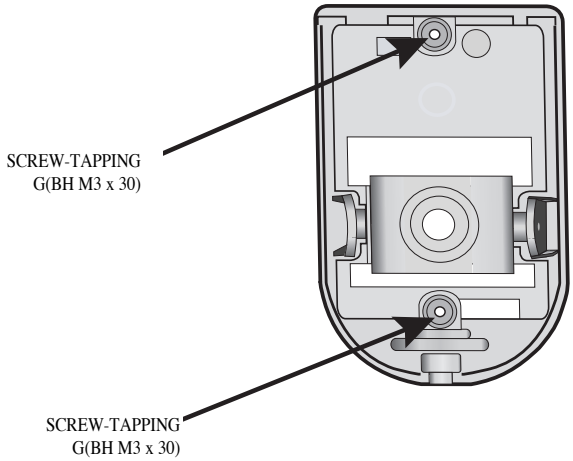

6. Adjust the direction of the lens.

1) Use the cross (+) screw driver to turn the screw (indicated by the arrow in the illustration) counterclockwise slightly. The lens body will move.

2) Tilt the lens body down about 10° from the horizontal, and then turn the screw clockwise to fasten it.

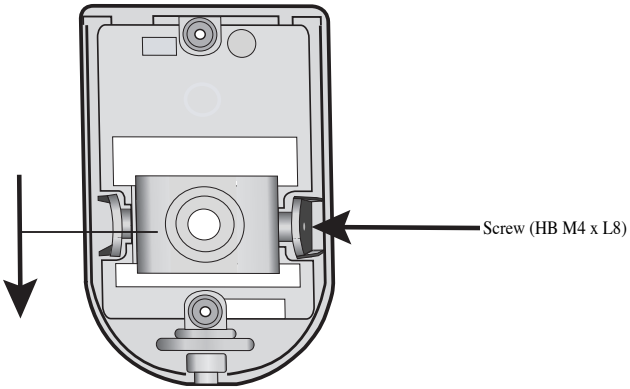

7. Assemble the assy-case front onto the case-rear as shown in the illustration. Fasten the assy-case front to the case-rear with the screw (BH M2.6) you removed earlier.

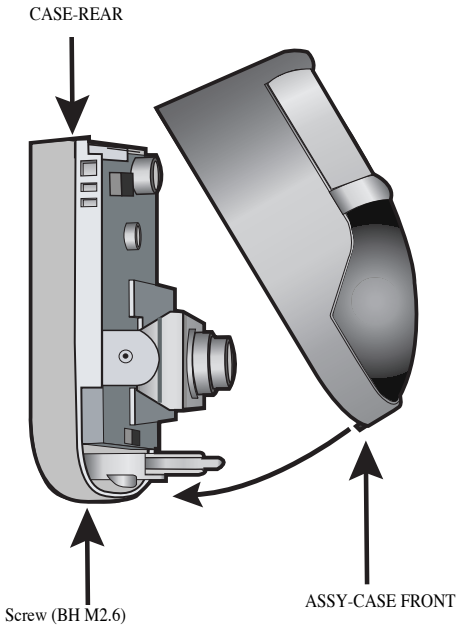

Installing the Camera using the Mount-Corner

1. Choose an installation site that can suffi ciently support 5 times the weight of the equipments to be installed.
2. Place the mount-corner to the corner to which you want to install the camera and mark screw holes with a pencil (indicated by the blue circles in the illustration). Drill a pilot hole for each pencil mark (5mm in diameter and at least 35mm in depth), and then fully insert the supplied plastic anchors (HUD 5) into them.

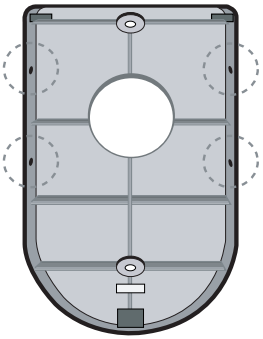

3. Install the mount-corner by aligning the four holes of the mount-corner to the holes of the plastic anchors, and then fastening the screw-tappings (BH M3 X 30).

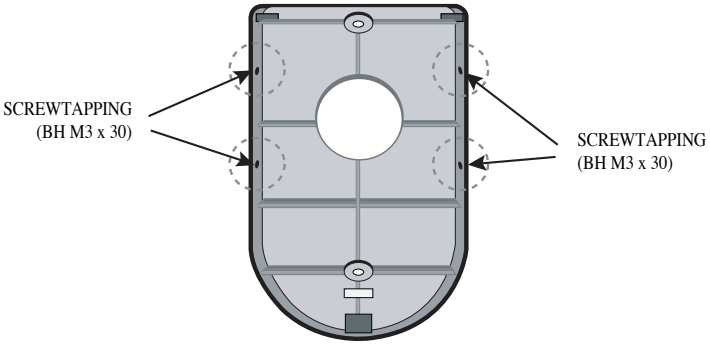

4. Remove the screw (BH M2.6) at the bottom of the main unit by turning it counterclockwise, and then lift the assy-case front as you push it upward to detach it from the case-rear.
(※ Do not apply excessive force, as doing so may damage the inside assembly.※)

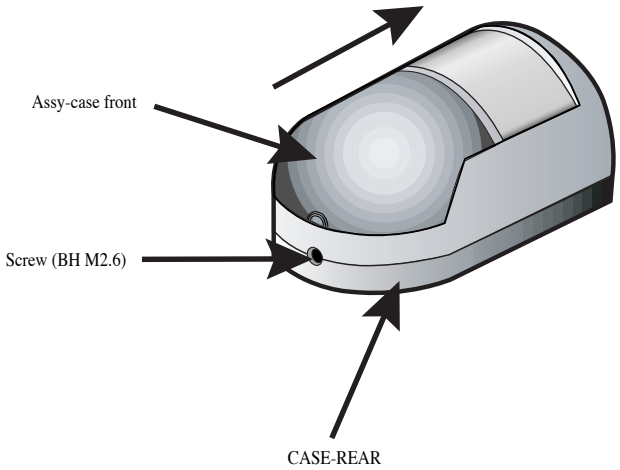

5. Connecting Cables.

1) Connecting the cables to the case-rear.
Connect the RJ-11 cable to the RJ-11 connector on the case-rear and connect the camera cable to the cable terminal on the on the case-rear.

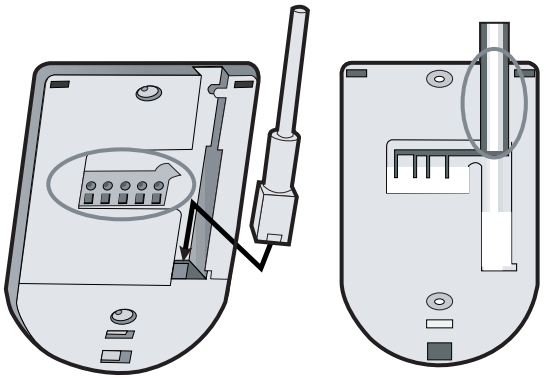

2) Passing the cables through the hole on the mount-corner.
Pass the cables through the hole on the mount-corner as shown in the right picture below.

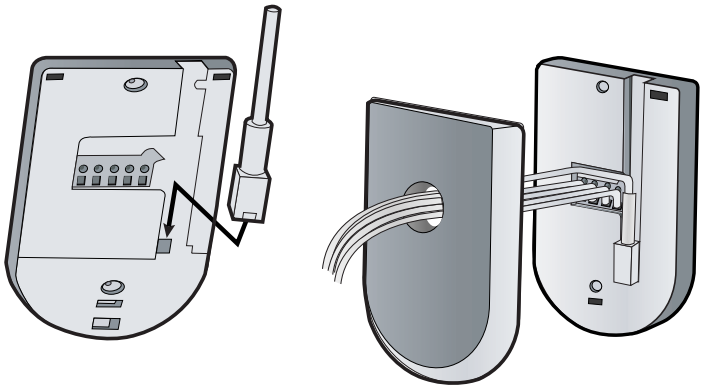

6. Assemble the case-rear onto the mount-corner by aligning the two holes of the caser-ear to the protrusions of the mount-corner (indicated by the blue circles in the illustration) and fastening the screw-tappings (PH M3 X 16).

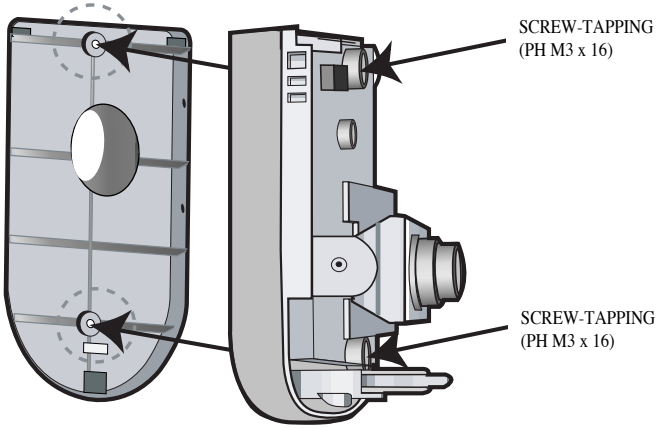

7. Adjust the direction of the lens.

1) Use the cross (+) screw driver to turn the screw (indicated by the arrow in the illustration) counterclockwise slightly.
   The lens body will move.
2) Tilt the lens body down about 10° from the horizontal, and then turn the screw clockwise to fasten it.

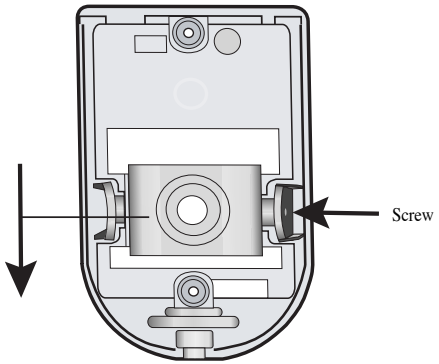

8. Assemble the assy-case front onto the caserear as shown in the illustration. Fasten the assy-case front to the case-rear with the screw (BH M2.6) you removed earlier.

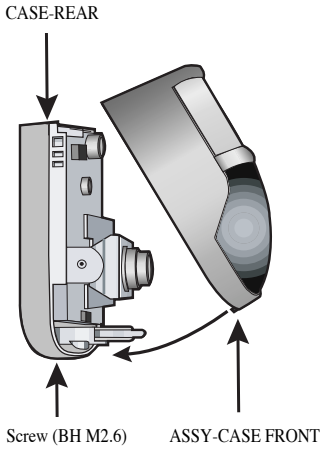

4) Camera Mount Bracket(SBR-110) & Standard Camera (SOC-C120P)

(1) Overview

CAMERA MOUNT BRACKET (SBR-110) is used to attach the camera to a wall, ceiling or shelf.

(2) Installation

Explains the installation of CAMERA MOUNT BRACKET as wall as the installation of the camera onto the CAMERA MOUNT BRACKET.

- Choose an installation site that can sufficiently support the weight of the equipments to be installed.
- Attach the camera mount bracket to the wall using the supplied screws (M4 X L15).

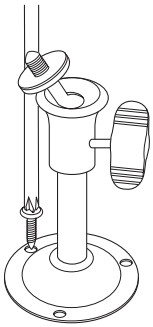

- Adjust the camera to target the video location and tighten the bracket handle on the camera mount bracket. Install the camera on to the male screw of the Camera Mount Bracket by rotating the camera in clockwise.

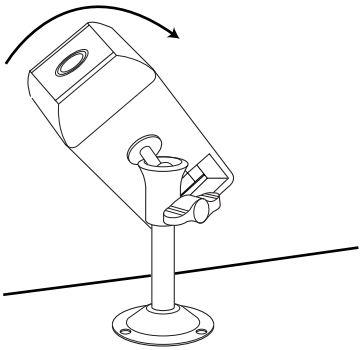

- Loosen the handle by turning it in a counter clockwise direction and then adjust the camera position . Tighten the handle, turning it clockwise, and lock the camera in position.

- Connect the camera cable to the camera.

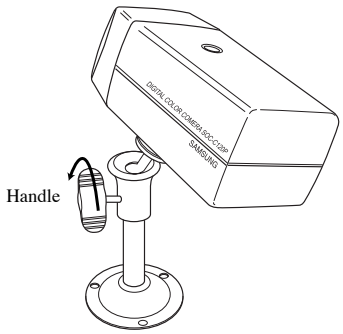

(3) Specifications

Use : Indoor

Installation : Wall or Ceiling

Dimensions : 57 (W) X 47.2(H) X 100.5(L)

Weight : 150g

Operating Temperature : -10°C ~ 50°C

(4) Accessories

SCREW (M3 X L16) : 3 pcs

1-4) CAMERA Composition and Connecting Method to MONITOR

After positioning monitor and installing three cameras to a desired location, please connect CAMERA to MONITOR through CAMERA CABLE (MCB-60 or MCB-100) as shown in the below figure. Please check whether or not it is properly connected.

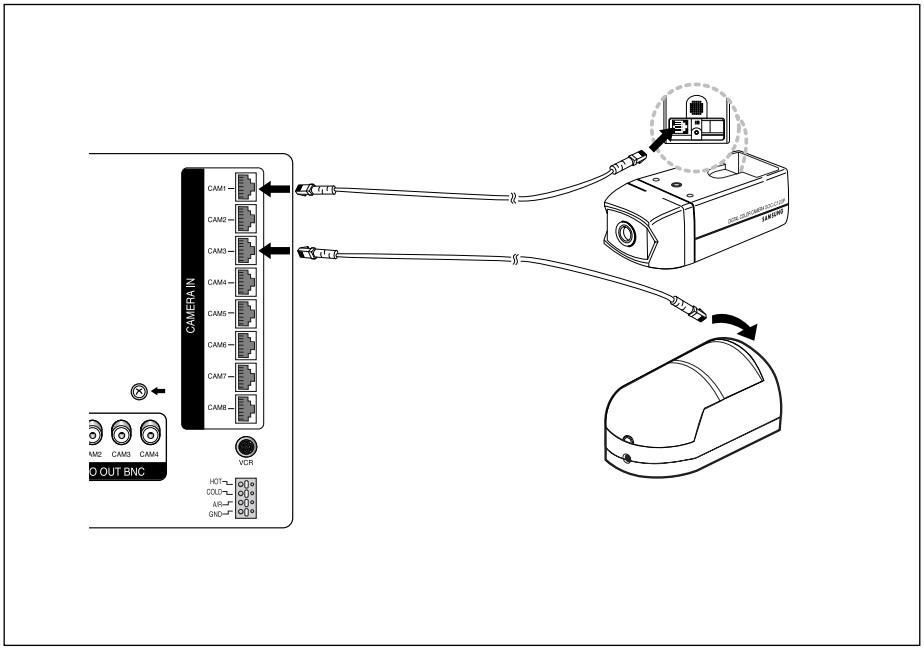

Connection status checking method :

- Turn on the monitor after connecting cameras, and check if camera image is displayed. The initial screen mode of monitor is quad mode.
- In case monitor and camera is not connected, OSD 'L'(LOSS) will be displayed on blue screen.

1-5) External terminal connecting method for CAMERA and MONITOR

1) External terminal connecting method for CAMERA

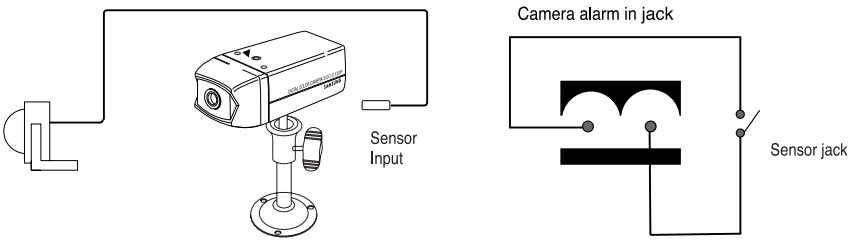

- An additional PIR sensor or external sensor can also be connected.
- The additional PIR sensor can be connected as shown in the above graphic.
- Sensor's trigger signal is NO (Normal Open).
- Sensor is not supplied. (Sold separately).

2) VIDEO OUT BNC (1~4) terminals connecting method of monitor rear

VIDEO OUT BNC1 ~ BNC4 terminals in the rear of the monitor are VIDEO terminals for outputting video images from OBSEVATION CAMERA to THROUGH OUT.

BNC VIDEO output terminal can be used to connect to VCR (TIME LAPSE) or SLAVE MONITOR.

3) VCR or ALARM terminal connecting method

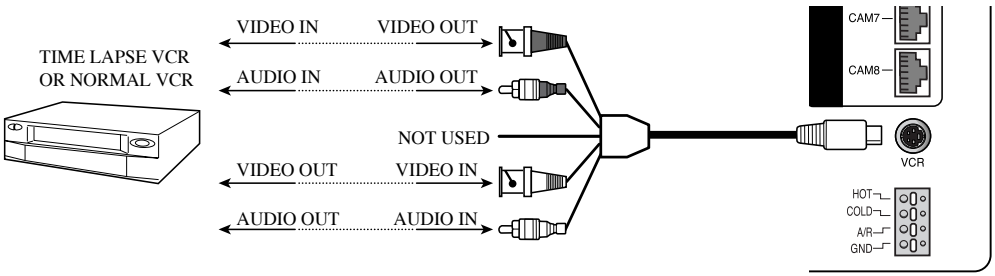

a) Connect the 6-pin plug to the VCR terminal on the real panel.

b) Connect the VIDEO OUT plug to the VIDEO IN terminal of the VCR.

c) Connect the VIDEO IN plug to the VIDEO OUT terminal of the VCR.

d) Connect the AUDIO OUT plug to the AUDIO IN terminal of the VCR.

e) Connect the AUDIO IN plug to the AUDIO OUT terminal of the VCR.

f) Connect the A/O (HOT) terminal on the rear panel to the Alarm IN terminal of the VCR.

g) Connect the A/O (COLD) terminal on the rear panel to the Ground terminal of the VCR.

h) Connect the A/R terminal on the rear panel to the Alarm Reset terminal of the VCR.

i) Connect the G (ground) terminal on the rear panel to the Ground terminal of the VCR.

1-6) Whole System connection and configuration

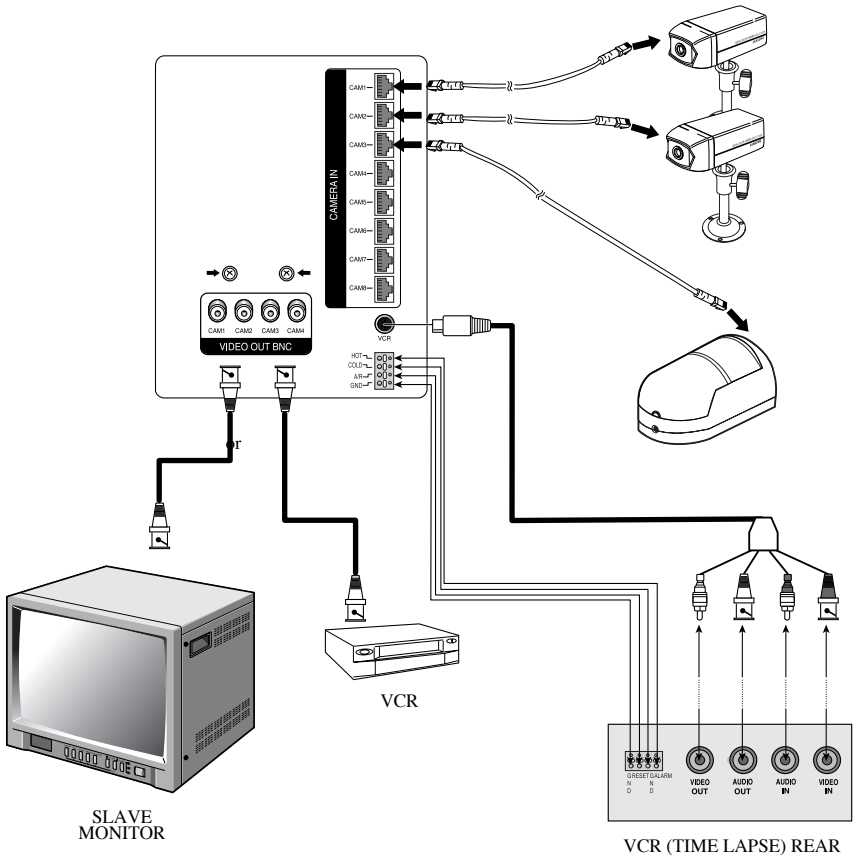

Chapter 2: MONITOR FRONT PANEL KEY Function and Using Method

Front Panel

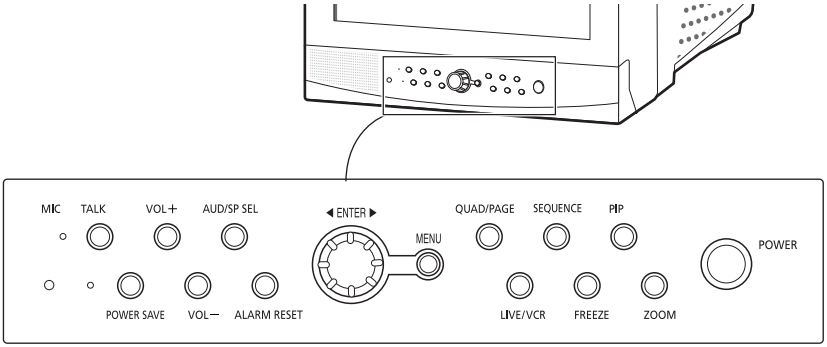

2-1) **TALK** KEY

TALK KEY allows users to transmit voice signal to intended camera by inputting voice with built-in MIC in the front of the monitor. For this function, select a target camera (CH 1, 2, 3, 4) with the ◀**ENTER**▶ SWITCH on the FRONT PANEL, and press AUD/SP SEL KEY. At this time, if a voice signal is generated through the MIC with the TALK KEY pressed, the signal will be transmitted to the camera.

* TALK function for this system is supported to CH 1, 2, 3, 4.

2-2) AUD/SP SEL KEY

AUD/SP SEL KEY allows users to select a camera to exchange voice signals with the monitor at QUAD DISPLAY MODE. At QUAD DISPLAY MODE, select target camera display by turning ◀**ENTER**▶ SWITCH left or right, and press AUD/SP SEL KEY. Then "S" OSD will be displayed on the selected screen. If you want to exchange voice signals with another camera, turn again the ◀**ENTER**▶ SWITCH again to select the camera display, and press AUD/SEL KEY. Then, "SP" OSD will be displayed and users can exchange voice signals with the monitor.

2-3) **VOL+/VOL-** KEY

Allows users to decrease or increase voice signal generated from the monitor.

VOL+ : Increase sound volume from the monitor.

VOL- : Decrease sound volume from the monitor.

2-4) POWER SAVE- KEY

Allows users to set POWER SAVE MODE of monitor. PICTURE screen is off when the POWER SAVE KEY is pressed, and the ON/OFF status of the monitor can be judged through LED ON/OFF status. Users can exit from POWER SAVE MODE by pressing POWER SAVE BUTTON again under picture “OFF” status. POWER SAVE MODE is automatically cancelled and picture is “ON” when an event such as an alarm or loss at POWER SAVE MODE occurs.

2-5) ALARM RESET- KEY

Alarm function can be cancelled while the alarm is working.

2-6) QUAD/PAGE- KEY

Allows users to display QUAD-A or QUAD-B at QUAD DISPLAY MODE.

- QUAD-A : QUAD DISPLAY MODE from Camera 1 to Camera 4.
- QUAD-B : QUAD DISPLAY MODE from Camera 5 to Camera 8.

2-7) LIVE/VCR- KEY

Allows users to switch LIVE MODE to VCR MODE or VCR MODE to LIVE MODE. If VCR MODE is cancelled, the QUAD picture of LIVE MODE will be automatically displayed. In case any event happens at VCR MODE such as LOSS or ALARM, the MODE will be automatically switched to LIVE MODE, and the pre-set operation for the event will be carried out. If there is no external input at VCR MODE, the OSD “NO SIGNAL” will be displayed.

- LIVE MODE: Image and voice signal from CAMERA is displayed.
- VCR MODE: External image and voice signal from VCR terminal from the rear of the monitor is displayed.

2-8) PIP- KEY

Can be used to see the main screen while Single screen is displayed. The main screen can be changed and transfered to another channel while PIP is working. Please refer to "CHAPTER 4. DISPLAY MODE SETTING" for PIP function and details.

2-9) FREEZE- KEY

This key allows users to see a target camera picture at PAUSE MODE. If users select the camera with the ◀**ENTER**▶ KEY, and press the FREEZE BUTTON, the OSD “F” will be displayed on pause picture from the camera. Other FRONT KEY input is ignored at FREEZE MODE, and other FRONT KEY inputs will be available only after the FREEZE MODE is cancelled.

2-10) SEQUENCE- KEY

It makes a picture switch sequentially. This means that display the picture will be displayed during the DWELL TIME pre-set at the DWELL MENU of SETUP MENU, and switch the picture automatically as a pre-set sequence. Please refer to Chapter 3. DWELL TIME MENU function and setting method for details of DWELL TIME setting.

2-11) ZOOM- KEY

It zooms a part of a picture doubling it in the display. If the ZOOM BUTTON is pressed, zoom area will be displayed. Users can move to a target area by turning ◀**ENTER**▶ SWITCH left and right at this time. If ◀**ENTER**▶ SWITCH is pressed at the target area, the area will be displayed with 2 times larger.

2-12) POWER- KEY

It turns ON/OFF the power of the monitor and camera at the same time.
In case the monitor power is ON, LED of monitor front is lit.

2-13) ENTER- KEY

As a multi functional ◀**ENTER**▶ key, it allows users to 1. enter SET UP MENU movement and SETTING MODE and set data, and 2. display single camera picture.
Please refer to the below picture.

- ◀**ENTER**▶ **SWITCH using method at MENU setting**

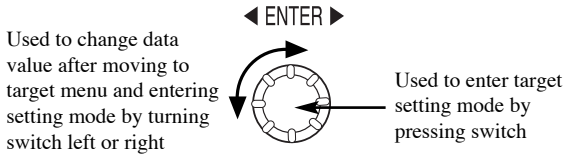

- **SINGLE DISPLAY MODE Entering and Function**

At QUAD DISPLAY or SEQUENTIAL SWITCHING MODE, pressing the ◀ENTER▶ SWITCH allows users to enter the SINGLE DISPLAY MODE to see the image of one selected camera at full screen. Users can move to another camera image by the ENTER SWITCH turning left and right.

2-14) MENU- KEY

It allows users to enter SETUP MENU, and set the following items on the SETUP MENU.

- **ADJUST :** Screen adjustment
- **DATE/TIME MENU :** Setting of Date/Time format and time to be displayed
- **DWELL MENU :** Setting of DWELL TIME at SEQUENTIAL SWITCHING MODE
- **DISPLAY MENU :** Setting DISPLAY MODE
- **TITLE MENU :** Setting camera name
- **ALARM MENU :** Setting ALARM and BUZZER
- **VIEW EVENT LOG MENU :** Allows users to see EVENT (ALARM, LOSS) list per time, camera

Please refer to the following Chapter 3 for setting method and function of SETUP MENU per item.

Chapter 3: Setting each item function at SETUP MENU

Pressing the MENU BUTTON of the FRONT PANEL allows users to enter SETUP MENU and see the following menu OSD box. Setting method of each SETUP MENU function and operation is as follows.

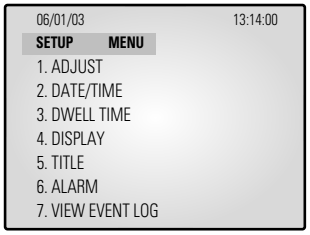

3-1) ADJUST MENU function and setting method

- Function: Allows adjustment to the display status
- Setting method: Move to #1. ADJUST MENU by using ◀**ENTER**▶ SWITCH and press the ENTER SWITCH to display the OSD as shown in the figure below. (The figure shows the initial setting status.)

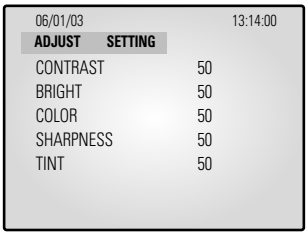

Move to a target item by turning ◀**ENTER**▶ SWITCH left or right.

Enter the item by pressing the ◀**ENTER**▶ SWITCH.

At this time, set a target value by turning ◀**ENTER**▶ SWITCH left or right.

You can move to another item by pressing again the SWITCH after setting the target value.

(1) CONTRAST : Adjusts light and shade of screen

(2) BRIGHT : Adjusts lightness of entire screen

(3) COLOR : Adjusts color density

(4) TINT : Adjusts color sense (Depending on the model)

(5) SHARPNESS : Adjusts contour of screen

3-2) DATE/TIME MENU Function setting

- **Function:** Sets the display date format and current time.
- **Setting method :**Move to #2. DATE/TIME MENU by using ◀**ENTER**▶ SWITCH at setup menu, then press the ENTER SWITCH to display the OSD as shown in the below figure.
  (The figure shows the initial setting status.)

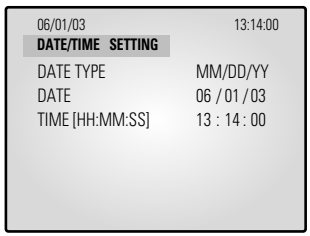

- **Setting method of date display format**
  Move to the format item by turning ◀**ENTER**▶ SWITCH, and enter the mode for setting date format by pressing the ENTER SWITCH.
  At this time, select a target date format by turning left and right the SWITCH.
  ("YY/MM/DD", "MM/DD/YY", "DD/MM/YY" are available for selectable data format.)
- **Date and current time setting method**
  Repeat the above instruction for moving to each item (MONTH, DAY, YEAR, HOUR, MINUTE, SECOND) and entering the mode. Current date and time to display can be set. (It can be referred when ALARM or LOSS occurs.)

3-3) DWELL TIME MENU function setting

- **Function :** Displays each picture for pre-set time and automatically switches it to the next picture at SEQUENTIAL DISPLAY MODE.
- **Setting method :** Move to #3. DWELL TIME menu by using ◀**ENTER**▶ SWITCH at SETUP MENU, and press the ENTER SWITCH to display the following OSD as shown in the below figure. (The figure shows the initial setting status.)

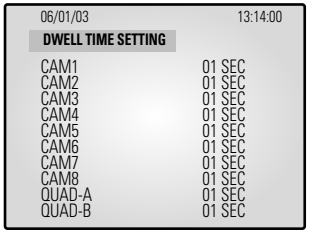

If the time is set for each camera channel by using ◀**ENTER**▶ SWITCH, each camera picture will be displayed for the set time and switched to the next picture automatically.

3-4) DISPLAY MENU function setting

- **Function :** Allows users to select the color and ON/OFF of borderline at QUAD DISPLAY.
- **Setting method :** Move to #4. DISPLAY SETTING MENU by using ◀**ENTER**▶ SWITCH at SETUP MENU, then press the ENTER SWITCH to display the OSD as shown in the figure below. (The figure shows the initial setting status.)

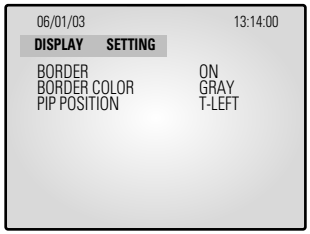

Move to each item by using ◀**ENTER**▶ SWITCH, and change the set value.

1) BORDER item determines whether or not boarder line is displayed at QUAD DISPLAY MODE. (ON : Displays the boarder line, OFF : Does not display the boarder line)
2) BORDER COLOR item sets boarder line color among three colors : Black, White, Gray.
3) PIP POSITION item sets the location of sub picture at PIP DISPLAY. (T-LEFT : Upper part of left side, T-RIGHT : Upper part of right side, B-LEFT : Lower part of left side, B-RIGHT : Lower part of right side)

3-5) TITLE MENU Function setting

- **Function:** Set the title of each camera at your discretion.
- **Setting method:** Move to #5. TITLE MENU by using ◀**ENTER**▶ SWITCH at SETUP MENU, and press the ENTER SWITCH to display the OSD as shown in the figure below. (The figure shows the initial setting status.)

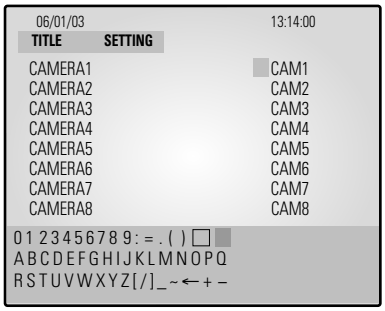

Move to a target camera channel by using ◀**ENTER**▶ SWITCH then press the ENTER KEY to display a cursor at the space of the first character of camera title. Move the cursor to a target character in OSD box of lower part by turning left and right ◀**ENTER**▶ SWITCH left or right, then press the ENTER KEY to set the character. The cursor automatically moves to the next space for a new character after one character is set. Set the title of camera by repeating the same method.
(Only eight characters are available for a camera title.)

3-6) ALARM MENU Function setting

- **Function:** Allows users to set the ALARM MODE for each camera.
- **Setting method:** Move to #6. ALARM MENU by using ◀**ENTER**▶ SWITCH at SETUP MENU, and press the ENTER SWITCH to display the OSD as shown in the figure below. (The figure shows the initial setting status.)

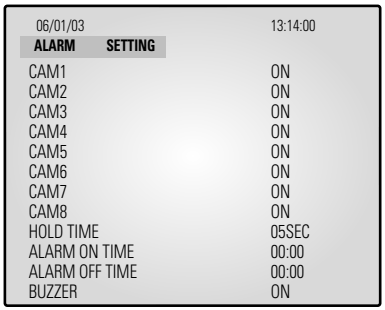

(1) CAM1 to CAM8 item sets whether the alarm sensor connected to the camera is used or not. (ON: Alarm function setting, OFF: Alarm function canceling)

(2) HOLD TIME item sets time to freeze alarm operation when alarm occuring. (HOLD TIME to be set: 05SEC ~ 1MIN ~ 30MIN)

(3) ALARM ON/OFF TIME item sets beginning time (ON) and end time (OFF) that monitor recognizes alarm operation as alarm event.

* Note : Even if CAMERA ALARM is set to ON, alarm operation is not carried at time band except pre-set ALARM ON/OFF TIME.

(4) BUZZER item sets whether or not buzzer device set in monitor is used at an ALARM or LOSS occurring. (ON: Buzzer operation, OFF: NA)

3-7) VIEW EVENT LOG MENU function and setting method

- **Function:** Displays the time and date of camera event and type of event.
- **Setting method:** Move to #7. VIEW EVENT LOG MENU by using ◀**ENTER**▶ SWITCH at SETUP MENU, then press the ENTER SWITCH to display the OSD as shown in the figure below. (The figure shows the initial setting status.)

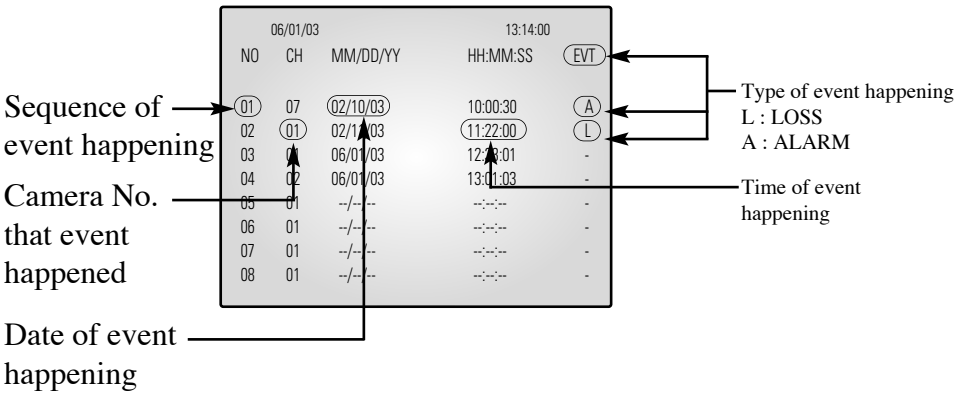

An event which occurred most recently is recorded with first priority, then users can move to the next page by using ◀**ENTER**▶ SWITCH. A Total of 64 events can be listed.

* Note : IF you press the FREEZE key and the SEQUENCE key at the same time, all event lists will be erased.

Chapter 4: DISPLAY MODE setting method

4-1) SINGLE SCREEN DISPLAY

Initial display mode of monitor is QUAD-A. In case users want to see the camera image at full mode, select a target camera by turning ◀**ENTER**▶ SWITCH left and right. After that, press the ENTER SWITCH and selected camera image will be displayed at full screen. If users turn the ◀**ENTER**▶ SWITCH left / right at SINGLE DISPLAY MODE at this time, they can see another camera image at full screen. For example, when users want to see CH1 at FULL MODE after SINGLE -displaying CH2 at QUAD-A, please follow the instructions below.

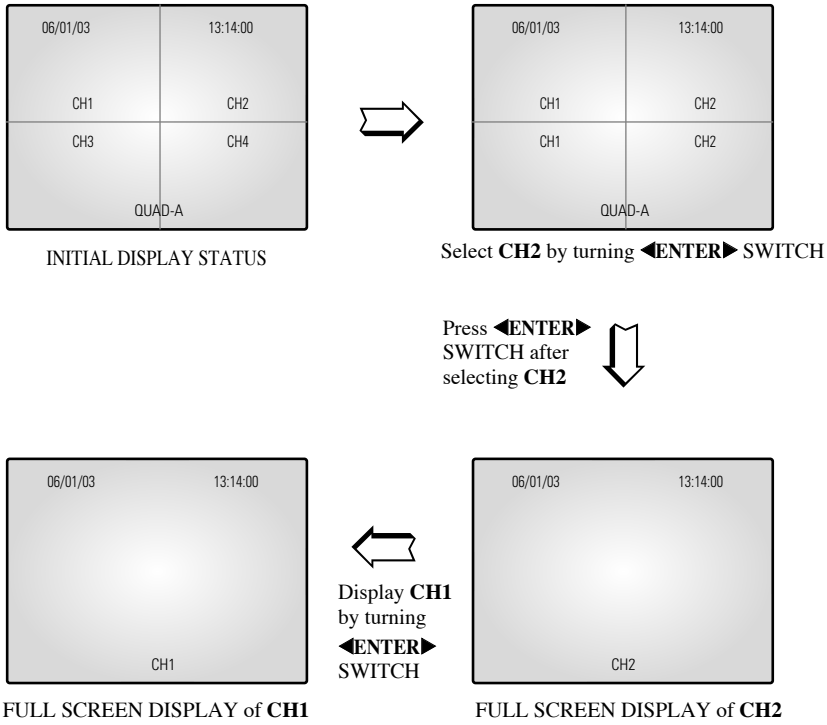

4-2) QUAD MODE DISPLAY

Users can switch SINGLE DISPLAY MODE and SEQUENTIAL DISPLAY MODE to QUAD DISPLAY MODE, or QUAD-A (QUAD-B) to QUAD-B (QUAD-A), or PIP MODE to QUAD MODE, press the QUAD/PAGE KEY.

* At QUAD MODE display from SINGLE MODE or SEQUENCE MODE

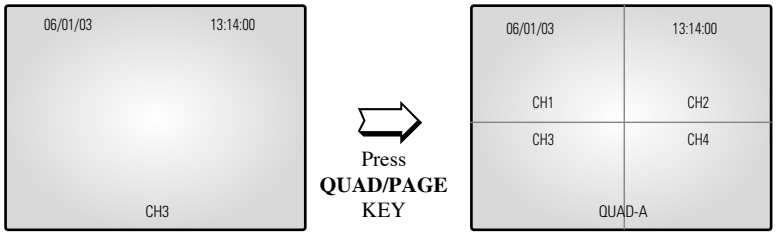

CH3 DISPLAY

QUAD MODE DISPLAY of QUAD-A

* At QUAD-B(QUAD-A) display from QUAD-A(QUAD-B)

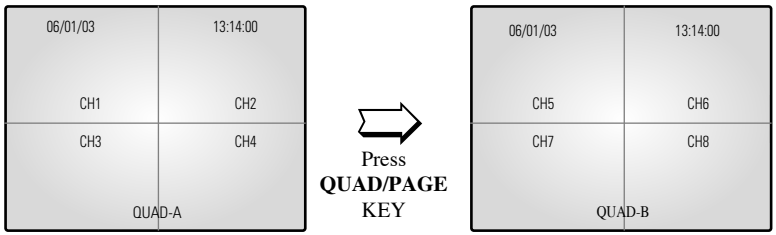

QUAD MODE DISPLAY of QUAD-A

QUAD MODE DISPLAY of QUAD-B

* At QUAD-B(QUAD-A) display from PIP MODE

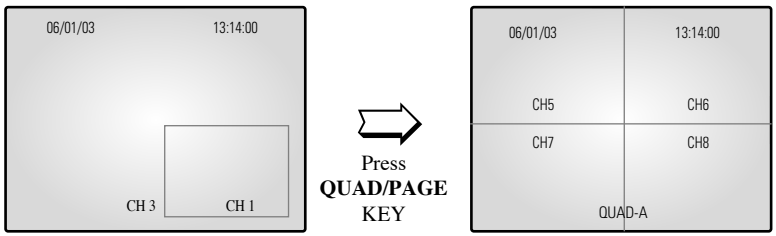

PIP MODE DISPLAY

QUAD MODE DISPLAY of QUAD-A

4-3) AUTO SEQUENTIAL DISPLAY MODE

Pressing on the SEQUENCE KEY on the front allows screen to automatically switch to SINGLE MODE full screen or QUAD MODE. ('no-signal' channels will be skipped while single screen is auto-switching.)

If the DWELL TIME SETTING of SETUP MENU is set to 3 seconds and the SEQUENCE KEY is pressed at this time, the operation will be carried out as follows.

* SINGLE MODE SEQUENCE DISPLAY

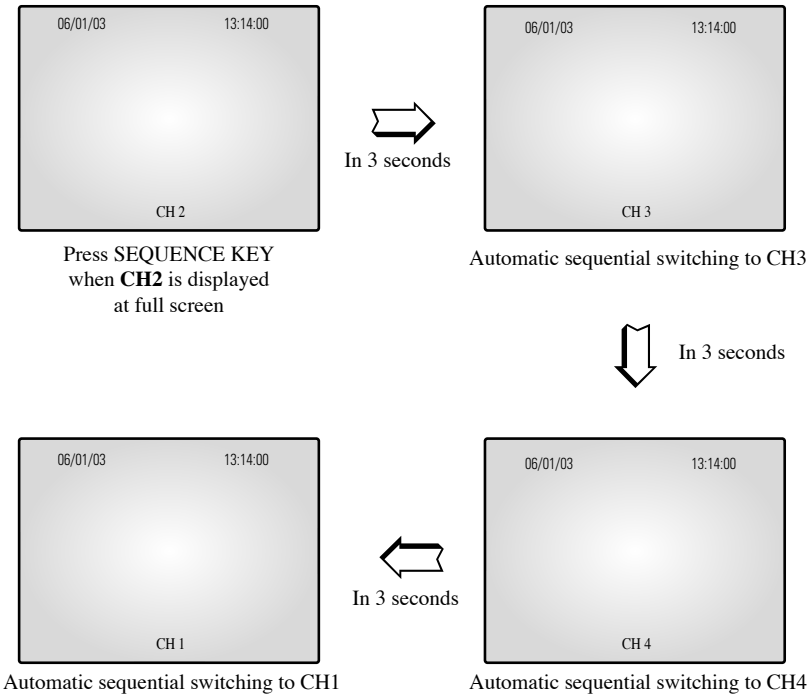

Press SEQUENCE KEY when **CH2** is displayed at full screen

Automatic sequential switching to CH3

Automatic sequential switching to CH4

Automatic sequential switching to CH1

* QUAD MODE SEQUENCE DISPLAY

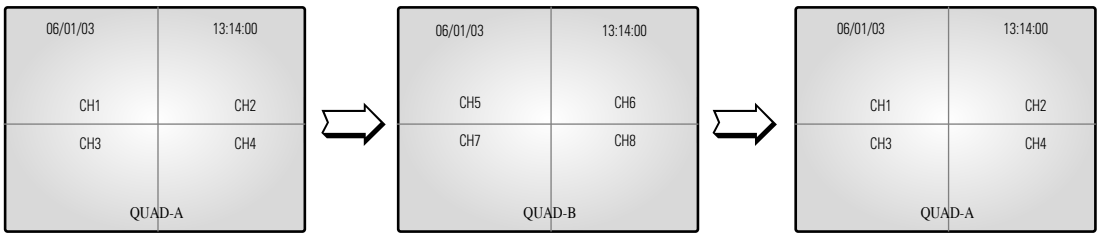

4-4) PIP MODE DISPLAY

Can be used to see PIP screen in Single screen mode.

If you press the ◀**ENTER**▶ on PIP screen ,the main screen will change. If you press the ◀**ENTER**▶ to the left and right,the main screen can be transferred to another channel. Sub-screen location can be selected on DISPLAY MENU in SETUP MENU.

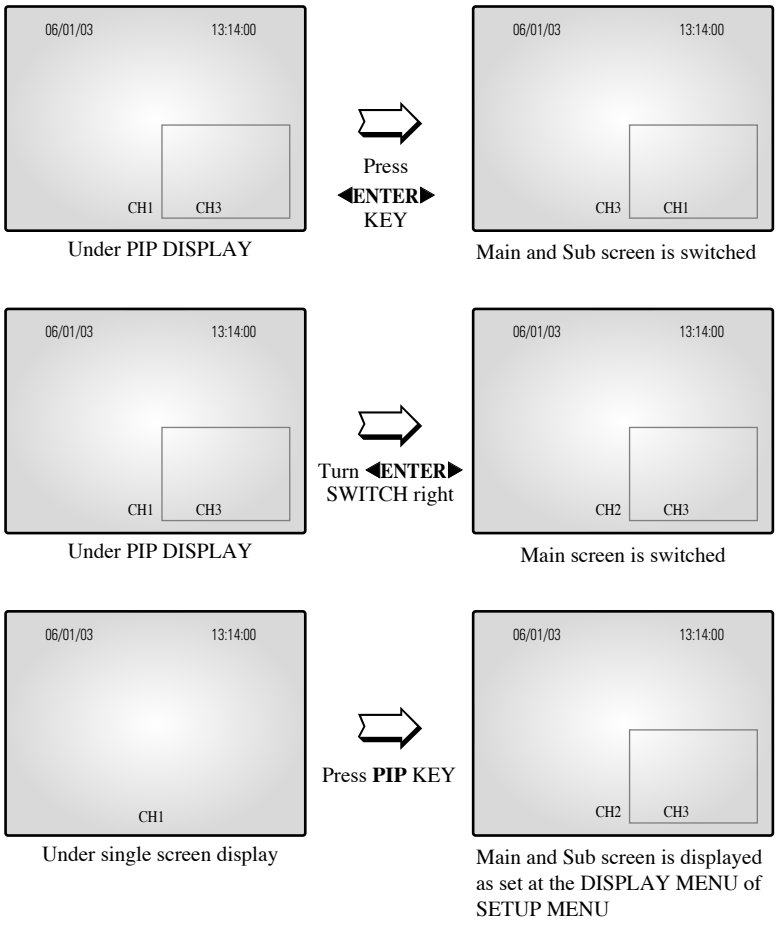

4-5) ZOOM MODE DISPLAY

When users want to see zoomed image of a specific area of the display, press the ZOOM KEY in the front to display zoom selection area. Select zoom target area by turning ◀**ENTER**▶ SWITCH left and right, and press the ENTER SWITCH, then, the selected area will be displayed at full single mode with zoomed area doubled. At zoom function operation at SINGLE DISPLAY MODE (CH2), the operation will be carried out as shown in figure below. (Zoom selection areas at SINGLE DISPLAY MODE are nine.)

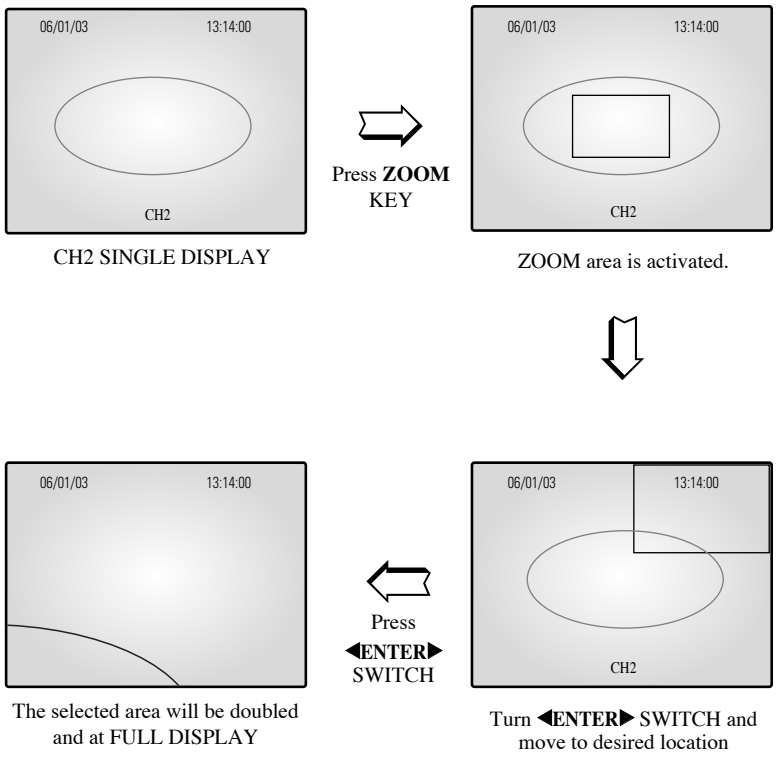

Chapter 5: Each product feature

SOC-C120P : Standard Camera

Model Name	SOC-C120P
Broadcasting System	PAL STANDARD
Imaging Device	1/4" SUPER HAD IT CCD
Effective Pixels	500(H) x 582(V)
Synchronization	Internal
Resolution	H : 330 TV Lines, V : 350 TV Lines
Signal Output	VBS 1.0Vp-p (75 ohm composite)
S/N Ratio	≤ 48 dB
Minimum Object Illumination	2lux (F2.0, 50 IRE)
Gamma Correction	0.45
Lens	Focal Length (f) : 3.8mm, Relative Aperture (F) : 2.0
Auto Exposure	Electronic Shutter Iris
Audio	-40dB Condenser Microphone Inclusion
I/O Connectors	Modular jack
Operating Temperature	-10 ~ +50 °C
Power Source	DC 12V (From Monitor)
Power Consumption	Approx. 2W
Dimensions (mm)	57(W) x 47.2(H) x 100.5(L)
Weight	130g

SOC-C321P : PIR Camera

Model Name	SOC-C321P
Broadcasting System	PAL STANDARD
Imaging Device	1/4" SUPER HAD IT CCD
Effective Pixels	500(H) X 582(V)
Synchronization	Internal
Resolution	H : 330 TV Lines, V : 350 TV Lines
Signal Output	VBS 1.0Vp-p (75ohm composite)
S/N Ratio	≤ 48 dB
Minimum Object Illumination	2 lux (F2.0, 50 IRE)
Gamma Correction	0.45
Lens	Focal Length(f) : 3.8mm, F Number = 2.0
Auto Exposure	Electronic Shutter Iris
PIR Sensor	Mounting Height : 1.5m to 3m (5ft to 10ft) Warm-Up Period : Max. 50 seconds Spectral Response : 5 to 14 um Sensitivity : 4860 (V/W) Detectivity : 1.5 x 10^{8}cm Hz $^{2/1}$/W Sensor : Off/On Alarm LED : Off/On (0.5 to 1 second) Alarm Output : NC (350V/130mA)
Audio	-40 dB Condenser Microphone Inclusion
I/O Connectors	Modular jack (RJ-11)
Operating Temperature	-10 ~ +50 °C
Power Source	DC 12V (Camera & Sensor from Monitor) DC 12V (Sensor Only from External Power Supply)
Power Consumption	Approx. 2W
Dimensions (mm)	40 (W) x 69.5 (H) x 115 (L)
Weight About	200g

OBSERVATION MONITOR

Video Input	• CAMERA 8 Input : 1.0Vp-p (CVBS), 75Ω • VCR 1 Input : 1.0Vp-p, 75Ω
Video Output	• BNC 4 Output : 1.0 Vp-p, 75Ω, CVBS • VCR 1 Output : 1.0 Vp-p, 75Ω, CVBS
Voice Input	• CAMERA 8 Input • VCR 1 Input
Voice Output	• TALK 4 Output(CH 1, 2, 3, 4) • VCR 1 Output
Alarm/Motion Features: Connected to Alarm Box/Camera	A/O (HOT, COLD) : Relay Active A/R (Alarm Reset) : Open Collector "L" Level, Pulse Width = 150ms or above Alarm Hold Time : Select 5 sec, 15 sec, 30 sec, 1 min, 3 min, 5 min, 10 min, 20 min, 30 min.
Sequence	Select between 01 sec to 30 sec.
Event List	(max) 64 case
Display mode	Single mode, Quad-A mode, Quad-B mode, PIP, Sequence Freeze, Zoom (X2)
Horizontal Resolution	350 TV Lines or more (Live Mode Full Screen)
Operation Temperature	0 °C ~ 40 °C
CRT	SMO-150QP : 15" FLAT CRT
Dimension (W x D x H (mm))	15" : (MONITOR) 388 X 459 X 379, (PACKING) 462 X 543 X 613
Weight	15" : (MONITOR) 15.2Kg, (PACKING) 22Kg
Power consumption	110W
High Voltage (KV)	28 ±2.0
Operation Humidity Range	0 ~ 90%
AC Input Ranges	Control range of main section 100V~250V or "Indicated on the rear of the MONITOR set"
Audio Output[watt]	1.5W

Memo



Part No.: AA68-
Printed in Korea